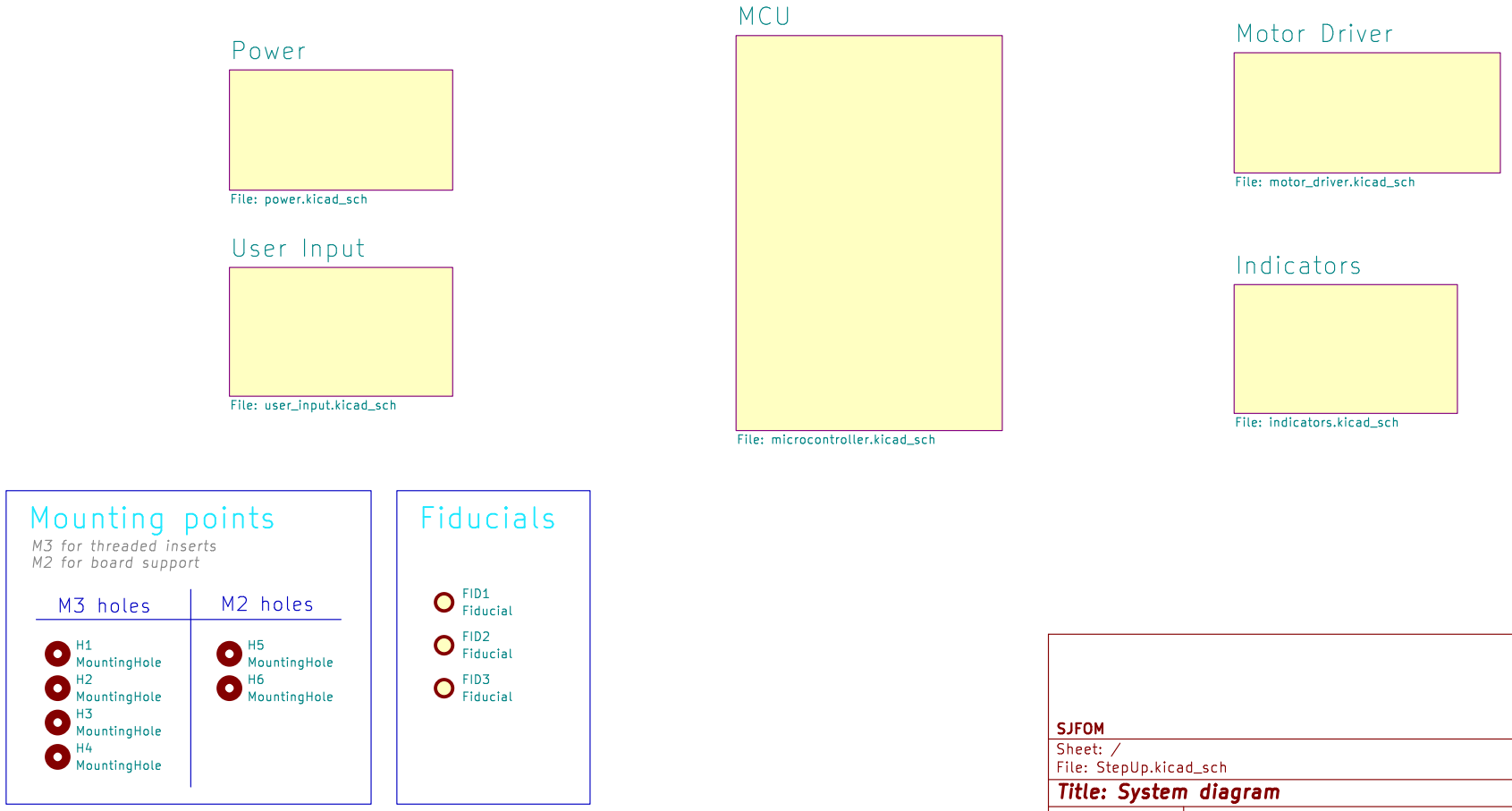

SJFOM

Sheet: /
File: StepUp.kicad_sch

Title: System diagram

Size: A4	Date: 2025-03-03	**Rev: v0.3**
KiCad E.D.A. 9.0.0		Id: 1/6

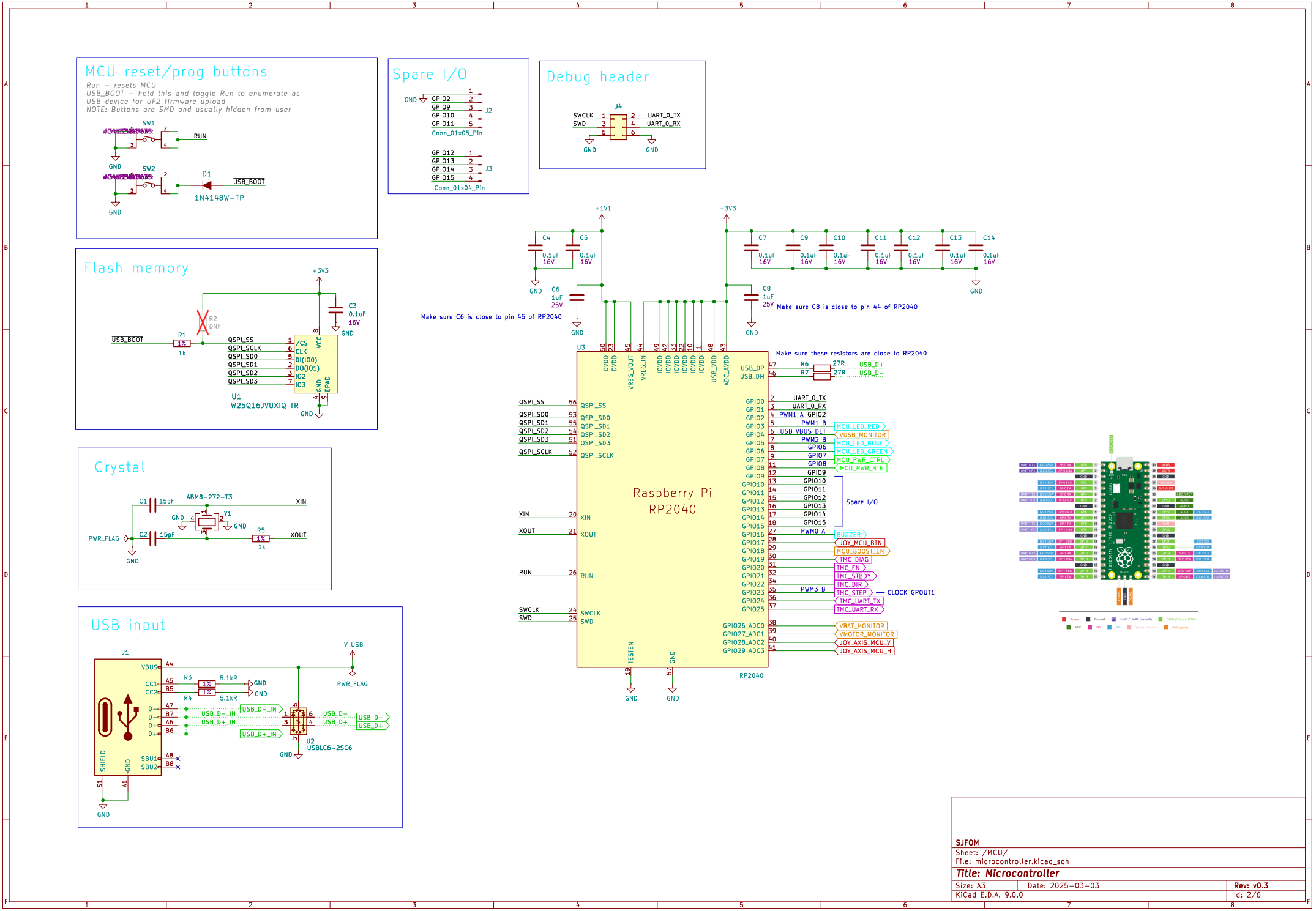
MCU reset/prog buttons
Run – resets MCU
USB_BOOT – hold this and toggle Run to enumerate as
USB device for UF2 firmware upload
NOTE: Buttons are SMD and usually hidden from user
SW1
RUN
SW2
D1
USB_BOOT
1N4148W-TP
GND
Spare I/O
GND
GPIO2
GPIO9
GPIO10
GPIO11
J2
Conn_01x05_Pin
GPIO12
GPIO13
GPIO14
GPIO15
J3
Conn_01x04_Pin
Debug header
J4
SWCLK
SWD
UART_0_TX
UART_0_RX
Flash memory
+3V3
C3
0.1uF
16V
R2
DNF
USB_BOOT
R1
1%
1k
QSPI_SS
QSPI_SCLK
QSPI_SD0
QSPI_SD1
QSPI_SD2
QSPI_SD3
/CS
CLK
DI(IO0)
DO(IO1)
IO2
IO3
VCC
GND
EPAD
U1
W25Q16JVUXIQ TR
Crystal
C1
15pF
ABMB-272-T3
XIN
Y1
C2
15pF
R5
1%
1k
XOUT
PWR_FLAG
USB input
J1
VBUS
CC1
CC2
D-
D+
SBU1
SBU2
SHIELD
A4
A5
B5
A7
B7
A6
B6
A8
B8
S1
A1
R3
5.1kR
R4
5.1kR
V_USB
PWR_FLAG
USB_D-_IN
USB_D+_IN
USB_D-
USB_D+
U2
USBLC6-2SC6
+1V1
+3V3
C4
C5
0.1uF
16V
C6
1uF
25V
Make sure C6 is close to pin 45 of RP2040
C7
C9
C10
C11
C12
C13
C14
C8
1uF
25V
Make sure C8 is close to pin 44 of RP2040
U3
Raspberry Pi
RP2040
Make sure these resistors are close to RP2040
R6
R7
27R
USB_D+
USB_D-
QSPI_SS
QSPI_SD0
QSPI_SD1
QSPI_SD2
QSPI_SD3
QSPI_SCLK
XIN
XOUT
RUN
SWCLK
SWD
UART_0_TX
UART_0_RX
PWM1 A GPIO2
PWM1 B
USB VBUS DET
PWM2 B
PWM0 A
PWM3 B
MCU_LED_RED
VUSB_MONITOR
MCU_LED_BLUE
MCU_LED_GREEN
MCU_PWR_CTRL
MCU_PWR_BTN
Spare I/O
BUZZER
JOY_MCU_BTN
MCU_BOOST_EN
TMC_DIAG
TMC_EN
TMC_STBDY
TMC_DIR
TMC_STEP
CLOCK GPOUT1
TMC_UART_TX
TMC_UART_RX
VBAT_MONITOR
VMOTOR_MONITOR
JOY_AXIS_MCU_V
JOY_AXIS_MCU_H
TESTEN
GND
RP2040
SJFOM
Sheet: /MCU/
File: microcontroller.kicad_sch
Title: Microcontroller
Size: A3
Date: 2025-03-03
Rev: v0.3
KiCad E.D.A. 9.0.0
Id: 2/6

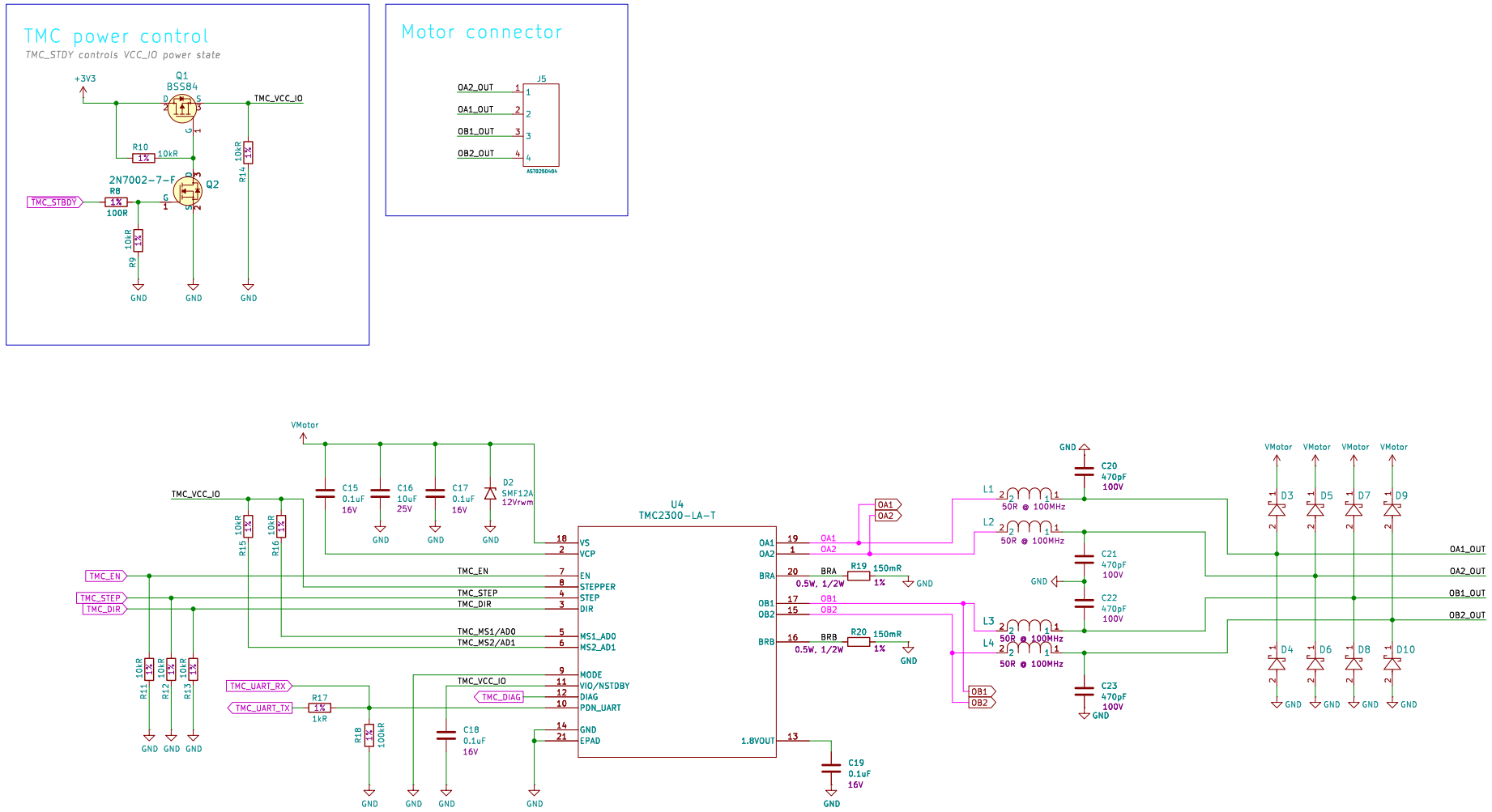

SJFOM		
Sheet: /Motor Driver/		
File: motor_driver.kicad_sch		
Title: Motor Driver		
Size: A3	Date: 2025-03-03	Rev: v0.3
KiCad E.D.A. 9.0.0		Id: 3/6

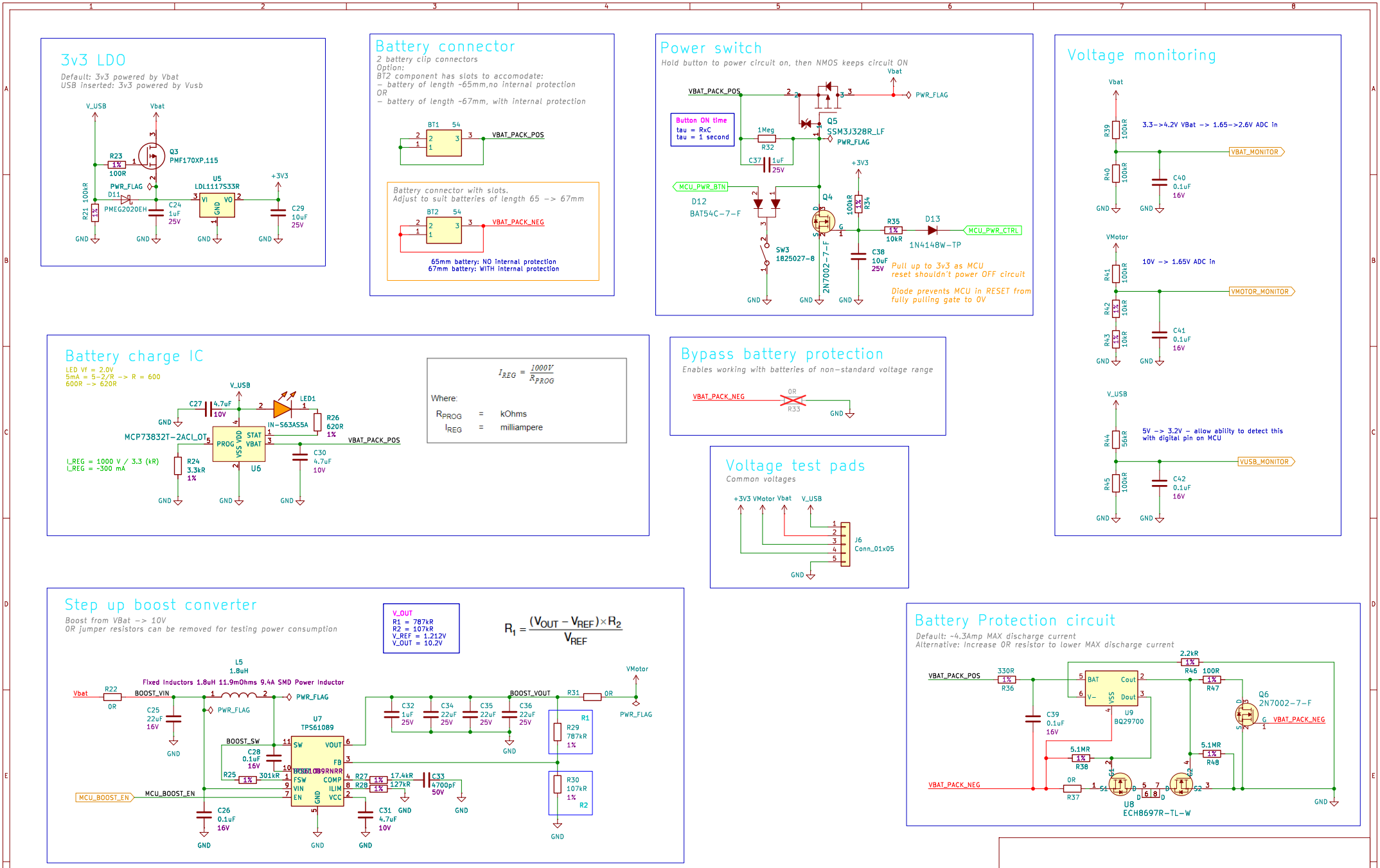
3v3 LDO
Default: 3v3 powered by Vbat
USB inserted: 3v3 powered by Vusb
V_USB
Vbat
R23
1%
100R
Q3
PMF170XP,115
PWR_FLAG
D11
PMEG2020EH
R21 100kR
1%
C24
1uF
25V
U5
LDL1117S33R
VI
VO
GND
+3V3
C29
10uF
25V
GND
Battery connector
2 battery clip connectors
Option:
BT2 component has slots to accomodate:
– battery of length ~65mm,no internal protection
OR
– battery of length ~67mm, with internal protection
BT1
54
VBAT_PACK_POS
Battery connector with slots.
Adjust to suit batteries of length 65 –> 67mm
BT2
VBAT_PACK_NEG
65mm battery: NO internal protection
67mm battery: WITH internal protection
Power switch
Hold button to power circuit on, then NMOS keeps circuit ON
Vbat
VBAT_PACK_POS
PWR_FLAG
Button ON time
tau = RxC
tau = 1 second
1Meg
R32
C37
1uF
25V
Q5
SSM3J328R_LF
PWR_FLAG
+3V3
MCU_PWR_BTN
D12
BAT54C-7-F
Q4
2N7002-7-F
SW3
1825027-8
100kR
1%
R34
R35
1%
10kR
D13
1N4148W-TP
MCU_PWR_CTRL
C38
10uF
25V
Pull up to 3v3 as MCU
reset shouldn't power OFF circuit
Diode prevents MCU in RESET from
fully pulling gate to 0V
GND
Voltage monitoring
Vbat
R39
100kR
R40
100kR
3.3–>4.2V VBat –> 1.65–>2.6V ADC in
VBAT_MONITOR
C40
0.1uF
16V
VMotor
R41
100kR
R42
1%
10kR
R43
1%
10kR
10V –> 1.65V ADC in
VMOTOR_MONITOR
C41
0.1uF
16V
V_USB
R44
56kR
R45
100kR
5V –> 3.2V – allow ability to detect this
with digital pin on MCU
VUSB_MONITOR
C42
0.1uF
16V
Battery charge IC
LED Vf = 2.0V
5mA = 5–2/R –> R = 600
600R –> 620R
V_USB
C27
4.7uF
10V
LED1
IN-S63AS5A
R26
620R
1%
MCP73832T-2ACI_OT
PROG
VSS
VDD
STAT
VBAT
VBAT_PACK_POS
C30
4.7uF
10V
U6
I_REG = 1000 V / 3.3 (kR)
I_REG = ~300 mA
R24
3.3kR
1%
$I_{REG} = \frac{1000V}{R_{PROG}}$
Where:
R_{PROG} = kOhms
I_{REG} = milliampere
Bypass battery protection
Enables working with batteries of non-standard voltage range
VBAT_PACK_NEG
OR
R33
GND
Voltage test pads
Common voltages
+3V3 VMotor Vbat
V_USB
J6
Conn_01x05
GND
Step up boost converter
Boost from VBat –> 10V
OR jumper resistors can be removed for testing power consumption
V_OUT
R1 = 787kR
R2 = 107kR
V_REF = 1.212V
V_OUT = 10.2V
$R_1 = \frac{(V_{OUT} - V_{REF}) \times R_2}{V_{REF}}$
L5
1.8uH
Fixed Inductors 1.8uH 11.9mOhms 9.4A SMD Power Inductor
Vbat
R22
0R
BOOST_VIN
C25
22uF
16V
PWR_FLAG
U7
TPS61089
SW
VOUT
FB
FSW
VIN
EN
COMP
ILIM
VCC
GND
BOOST_SW
C28
0.1uF
16V
R25
1%
301kR
MCU_BOOST_EN
C26
0.1uF
16V
C32
1uF
25V
C34
22uF
25V
C35
22uF
25V
C36
22uF
25V
BOOST_VOUT
R27
1%
17.4kR
R28
1%
127kR
C33
4700pF
50V
C31
4.7uF
10V
R31
0R
VMotor
R1
R29
787kR
1%
R30
107kR
1%
R2
Battery Protection circuit
Default: ~4.3Amp MAX discharge current
Alternative: Increase OR resistor to lower MAX discharge current
VBAT_PACK_POS
330R
1%
R36
2.2kR
1%
R46
100R
1%
R47
BAT
Cout
V–
VSS
Dout
U9
BQ29700
C39
0.1uF
16V
Q6
2N7002-7-F
VBAT_PACK_NEG
5.1MR
1%
R38
5.1MR
1%
R48
VBAT_PACK_NEG
0R
R37
U8
ECH8697R-TL-W
SJFOM
Sheet: /Power/
File: power.kicad_sch
Title: Power
Size: A3
Date: 2025-03-03
Rev: v0.3
KiCad E.D.A. 9.0.0
Id: 4/6

Status LED's

Status LEDs, RGB 3-in-1, through-hole, clear dome

LED resistor calculations (matching mcd values)

RED – 20mA = 600 mcd → 1mA = 30mcd
– 300mcd = 10mA
– Vf=2V (typ), 3.3–2V = 1.3V/10mA = 130R → 120R

BLUE – 20mA = 300 mcd → 1mA = 15 mcd
– 300mcd = 20mA
– Vf=3V (typ), 3.3–3V = 0.3V/20mA = 15R → 22R

GREEN – 20mA = 1300 mcd → 1mA = 65 mcd
– 300mcd = 4.6mA
– Vf=3V (typ), 3.3–3V = 0.3V/4.6mA = 65R → 60R

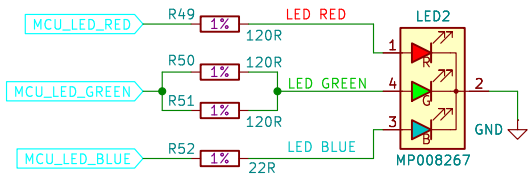

Buzzer

To indicate device states, f = 4kHz
~10V from the boost converter also used for the buzzer

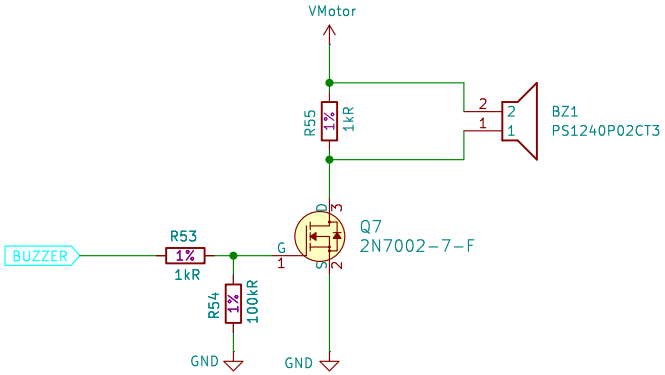

SJFOM

Sheet: /Indicators/
File: indicators.kicad_sch

Title: User Input

Size: A4	Date: 2025-03-03	**Rev: v0.3**
KiCad E.D.A. 9.0.0		Id: 5/6

Joystick

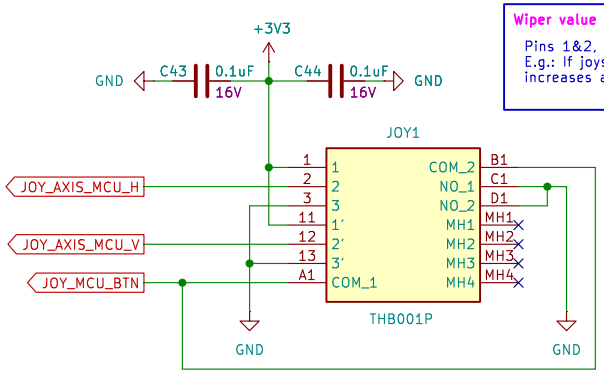

Wiper value

Pins 1&2, resistance goes down as wiper moved in that direction
E.g.: If joystick has pin 1 = 3v3 and pin 3 = GND, pin 2 voltage increases as josytick moved to pin 1, decreases as moved to pin 3

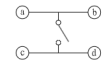

Circuit diagram

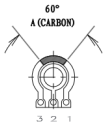

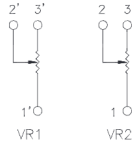

SJFOM

Sheet: /User Input/
File: user_input.kicad_sch

Title: User Input

Size: A4	Date: 2025-03-03	**Rev: v0.3**
KiCad E.D.A. 9.0.0		Id: 6/6